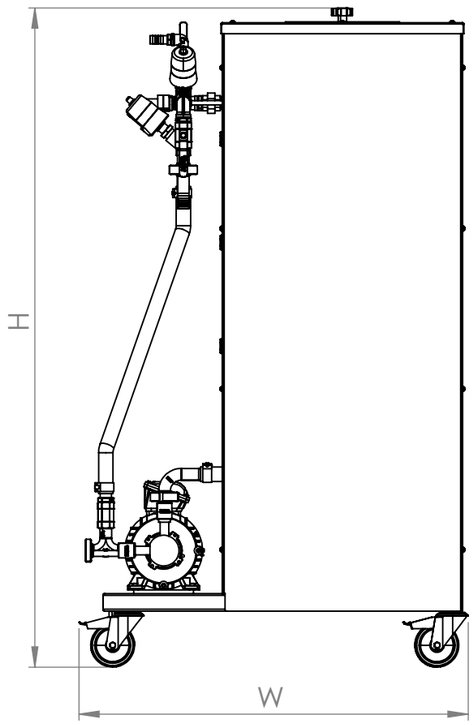

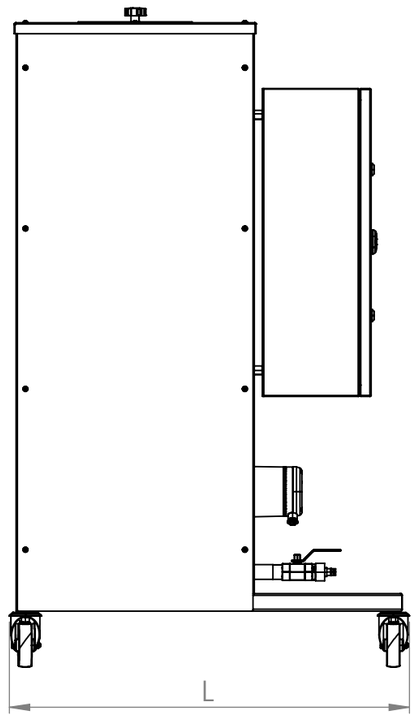

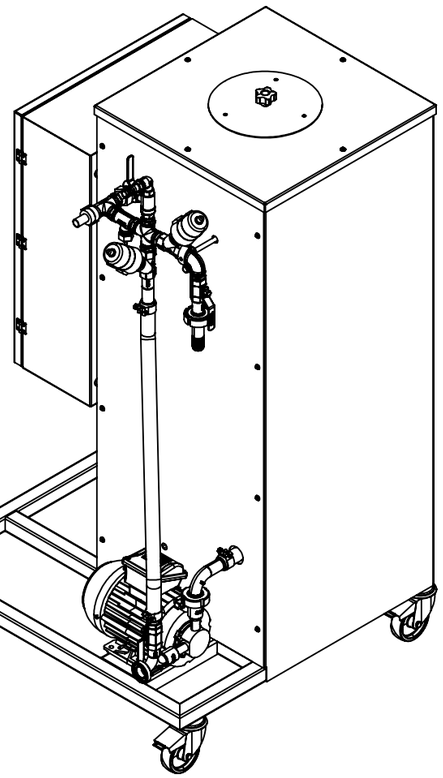

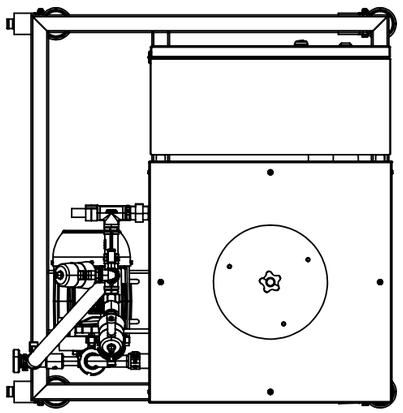

PROFRUIT -MACHINERY-	Machine	Electric Pasteurizer
	Type	SPARK

Output	kg/h	300-400
L	mm	912
W	mm	888
H	mm	1504
Max heating temp.	C	90
Weight	kg	115
Supply source	kW	31
Supply voltage	V	3/N/PE ~ 400 V 50Hz